JIB CRANES

The complete range of pillar and wall jib cranes for loads up to 6.3 tonnes.

ABUS
CRANE SYSTEMS

ABUS PILLAR JIB CRANES
EFFORTLESSNESS PUT INTO MOTION

Performing work in teams unites the potentials of individuals to form a strong company. ABUS jib cranes are efficient partners performing their tasks reliably and easing the load on the people who use them. With its comprehensive product line of jib cranes, ABUS offers flexible and cost efficient material handling solutions for any job in the workplace. ABUS jib cranes can be individually tailored – from the type of mounting or hoist to optional configurations for particular requirements – all produced to ABUS' high levels of quality.

With the touch of a button, they can handle loads up to 6.3 tonnes precisely and effortlessly – whether mounted on their own pillars or on walls or columns. For loading machines, changing heavy tools or lifting workpieces onto tables for processing – with ABUS jib cranes, the lifting is easier, more efficient and safer.

ABUS WALL JIB CRANES
HELPING TO EASE THE LOAD

Take a look at our brochure:

Quick overview/standard models	Page 4 — 5
ABUS Jib cranes in detail	Page 6 — 9
"Added value" solutions clearly explained	Page 10 — 11
Jib cranes used by our customers	Page 12 — 15
Mounting solutions	Page 16 — 19
Optional configurations	Page 20 — 22
ABUS hoists, integral parts of the system	Page 24
ABUS crane systems, all products	Page 25

ABUS JIB CRANES
THE CRANE FINDER

Installation position	Design	Capacity	Jib length	Slewing range	Crane type	Hoist	Movement		Operation	Mounting (according to capacity/ jib length)
							Trolley travel	Slewing		
free-standing	Pillar jib cranes	to 1 t	to 7 m	270°	LS	Electric chain hoist	push-pull		via pendant from hoist	Foundation block with anchor rods Dowel plate with floor dowels Intermediate plate with floor anchors
		to 0,5 t	to 7 m	270°	LSX	Electric chain hoist	Push-pull or powered	push-pull	via pendant from hoist	
		to 4 t	to 10 m	n x 360°	VS 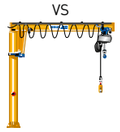	Electric chain hoist	Push-pull or powered		via pendant from hoist alt. mobile pendant control	
		to 6,3 t	to 10 m	n x 360°	VS	Electric wire rope hoist	powered		mobile pendant control	
on building support column or wall	Wall jib cranes	to 1 t	to 7 m	180° *	LW	Electric chain hoist	push-pull		via pendant from hoist	Wall bracket on steel support Bracket on building support column 3-sided column bracket on reinforced concrete columnsn Weld-on plate on building column/wall Wall bracket mounted on reinforced concrete wall
		to 0,5 t	to 7 m	180° *	LWX	Electric chain hoist	Push-pull or powered	push-pull	via pendant from hoist	
		to 4 t	to 10 m	180° *	VW	Electric chain hoist	Push-pull or powered		via pendant from hoist alt. mobile pendant control	
		to 5 t	to 10 m	180° *	VW	Electric wire rope hoist	powered		mobile pendant control	

180° * The effective slewing range depends on the installation position; it may be greater or less than 180°.

STANDARD MODELS
THE BASIS FOR WORKING SAFELY

General design

- welded ribs on pillar base for reliable transmission of forces and torque
- corrosion protection through rust removal by mechanical shot blasting to DIN 55928
- single-coat water-based paint finish of column and arm in RAL 1007, daffodil yellow
- direct control with 400 V/50 Hz control voltage (for jib cranes with electric chain hoist ABUCompact GM8 and electric wire rope hoist with 48 V control voltage as standard)
- complete with electrical systems including lockable mains switch and power supply to the hoist
- electrical equipment with class F insulation, protection type IP 55
- operated from floor level via the ABUCommander pendant controls (protection type IP 65)

Building codes

- version in accordance with DIN 15018 (Cranes; principles for steel structures) and EN 60204-32 (Electrical equipment of machines)
- the jib cranes and hoists meet the requirements of EU machinery directive as well as the German "Equipment and Product Safety Law"

Requirements for use

- ABUS jib cranes and components are designed exclusively for use in completely enclosed buildings under normal industrial operating conditions.

Hoists and trolleys
ABUS electric chain hoist ABUCompact

- 2 lift speeds for quick lifting and precise setting down of loads in a ratio of 1:4 (1:6 for ABUCompact GM8)
- pole-changing rotary cylinder motor with electromagnetically releasable disc brake
- adjustable slipping clutch with reliable safeguard against mechanical overloading
- easy-to-assemble, quick-fitting connectors for electrical power supply and control cables
- class F insulation, protection type IP 55
- motor housing painted in RAL 5017, traffic blue
- high-strength, galvanised profile steel chain with chain container
- push-pull trolley, which is rolled on the lower jib arm flange or in the profile of the jib arm
- clamping buffers fitted as end stops for the trolley

ABUS electric wire rope hoist GM

- 2 lift speeds for quick lifting and precise setting down of loads in a ratio of 1:6
- 2 travel speeds in a ratio of 1:4
- pole-changing rotary cylinder motors with electromagnetically releasable disc brakes
- contactor control 48 V
- electronic overload protection with hours in operation counter (included as standard if EU machine directive is applicable)
- easy-to-assemble electrical connections with quick-fitting connectors
- class F insulation, protection type IP 55
- gear unit limit switches for highest and lowest hook position
- painted in RAL 5017, traffic blue
- galvanised wire rope specially constructed for increased service life
- optimal size due to compact construction
- practically maintenance-free due to direct drives and lifetime lubrication of the gear units and roller bearings

ABUS PILLAR JIB CRANE LS MAKING WORK EASIER

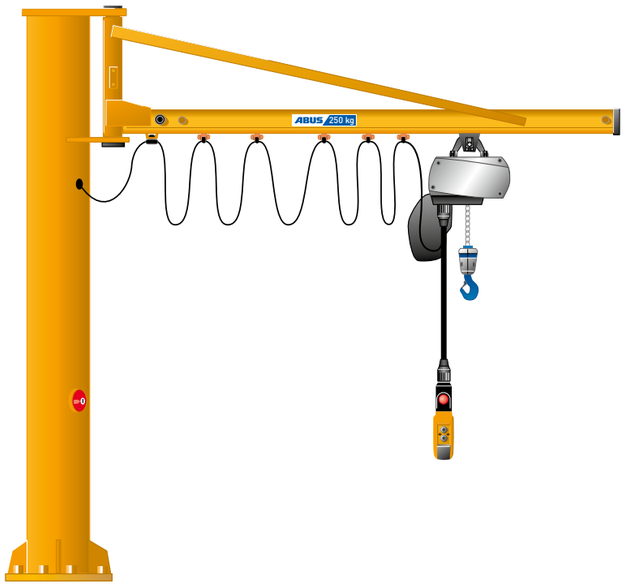

Rated slewing range 270°

with electric chain hoist

- lightweight design (DIN 15018 H2/B2)
- jib arm made of sturdy, hollow steel sections
- safety anchoring with ribbed pillar base
- trolley with easy roll plastic rollers
- square crane pillars

Jib length [m]	Capacity [kg]
to 7	80 to 250
to 6	500
to 5	1000

ABUS PILLAR JIB CRANE LSX EXTRA LIFT HEIGHT WHEN YOU NEED IT

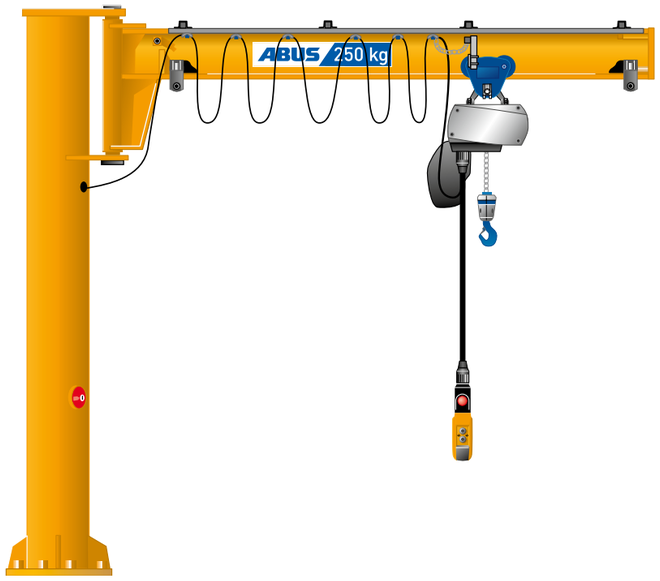

Rated slewing range 270°

with electric chain hoist

- lightweight design (DIN 15018 H2/B2)
- sturdy, steel construction with low-build profile section jib arm for optimised hook height
- easy roll jib mounting
- safety anchoring with ribbed pillar base
- easy installation of hoist trolley due to removable jib end plate and adjustable clamping buffers

Jib length [m]	Capacity [kg]
to 7	125
to 6	250
to 4	500

ABUS WALL JIB CRANE LW FOR ERGONOMIC RELIEF OF STRAIN

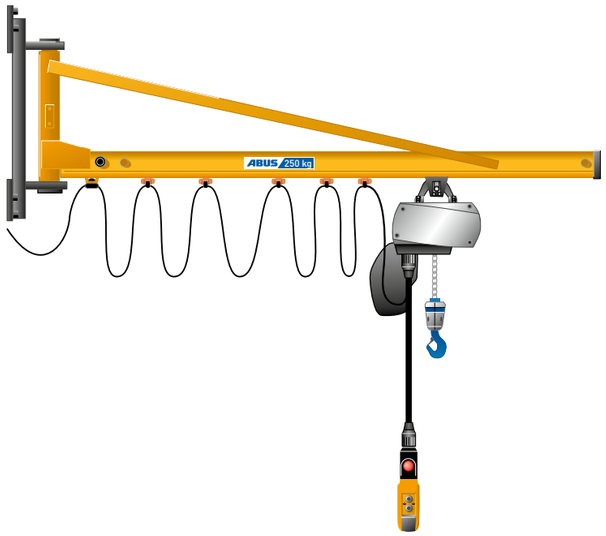

Rated slewing range 180°

with electric chain hoist

- lightweight design (DIN 15018 H2/B2)
- jib arm made of sturdy, hollow steel sections
- standard wall bracket
- trolley with easy roll plastic rollers

Jib length [m]	Capacity [kg]
to 7	80 to 250
to 6	500
to 5	1000

ABUS WALL JIB CRANE LWX THE MASTER OF ASSEMBLY

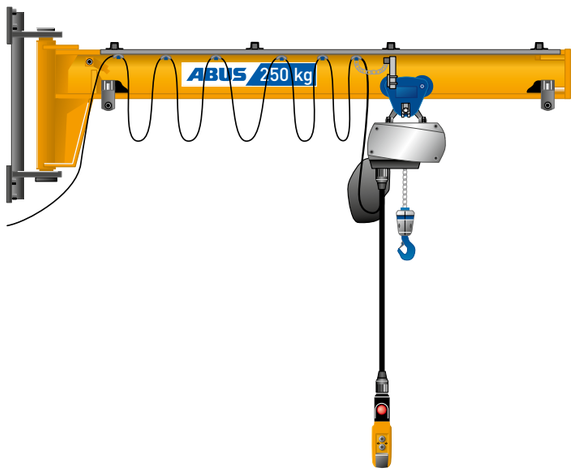

Rated slewing range 180°

with electric chain hoist

- lightweight design conforming to DIN 15018 H2/B2)
- sturdy, with low-build profile section jib arm for optimised hook height
- standard wall bracket
- easy installation of hoist trolley due to removable jib end plate and adjustable clamping buffers

Jib length [m]	Capacity [kg]
to 7	125
to 6	250
to 4	500

ABUS PILLAR JIB CRANE VS AN ALL-AROUND PERFORMER

with electric chain hoist

- light heavyweight design (DIN 15018 H2/B3)
- sturdy, steel construction with low-build profile section jib arm for optimised hook height
- safety anchoring with heavy-duty ribbed pillar base
- easy installation of hoist trolley due to removable jib end plate and adjustable clamping buffers
- electrical system incl. slip-rings

Rated slewing range ∞ x 360°

Jib length [m]	Capacity [kg]
to 10	125 to 2500
to 9	3200
to 8	4000

Fig.: VS with optional configurations (electric slewing gear and mobile control unit)

ABUS WALL JIB CRANE VW KEEPING THE FLOOR CLEAR

with electric chain hoist

- light heavyweight design (DIN 15018 H2/B3)
- sturdy, with low-build profile section jib arm for optimised hook height
- easy installation of hoist trolley due to removable jib end plate and adjustable clamping buffers

Rated slewing range 180°

Jib length [m]	Capacity [kg]
to 10	125 to 2500
to 9	3200
to 8	4000

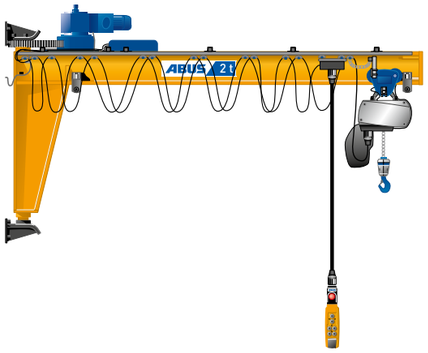

Fig.: VW with optional configurations (electric slewing gear and mobile control unit)

with electric wire rope hoist

- light heavyweight design (DIN 15018 H2/B3)
- sturdy, steel construction with low-build profile section jib arm for optimised hook height
- safety anchoring with heavy-duty ribbed pillar base
- easy installation of wire rope hoist trolley due to removable jib end plate and adjustable clamping buffers
- electrical system incl. slip-rings
- powered trolley, 2-speed
- powered slewing, 2-speed
- mobile control runs length of jib

Rated slewing range ∞ x 360°

Jib length [m]	Capacity [kg]
to 10	1000 to 2500
to 9	3200
to 8	4000
to 7	5000
to 5	6300

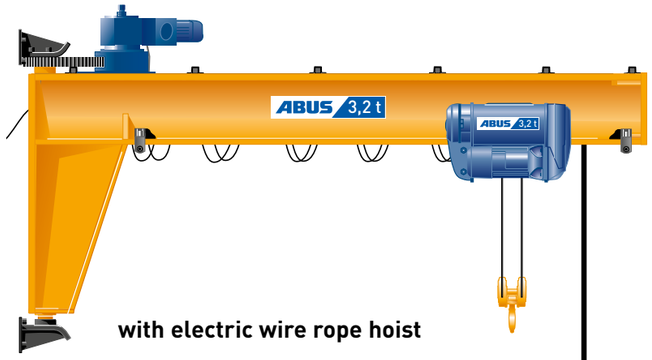

with electric wire rope hoist

- light heavyweight design (DIN 15018 H2/B3)
- sturdy, with low-build profile section jib arm for optimised hook height
- easy installation of wire rope hoist trolley due to removable jib end plate and adjustable clamping buffers
- powered trolley, 2-speed
- powered slewing, 2-speed
- mobile control runs length of jib

Rated slewing range 180°

Jib length [m]	Capacity [kg]
to 10	1000 to 2500
to 9	3200
to 8	4000
to 7	5000

A TYPICAL ABUS FEATURE "ADDED-VALUE" SOLUTIONS FROM A SINGLE SOURCE

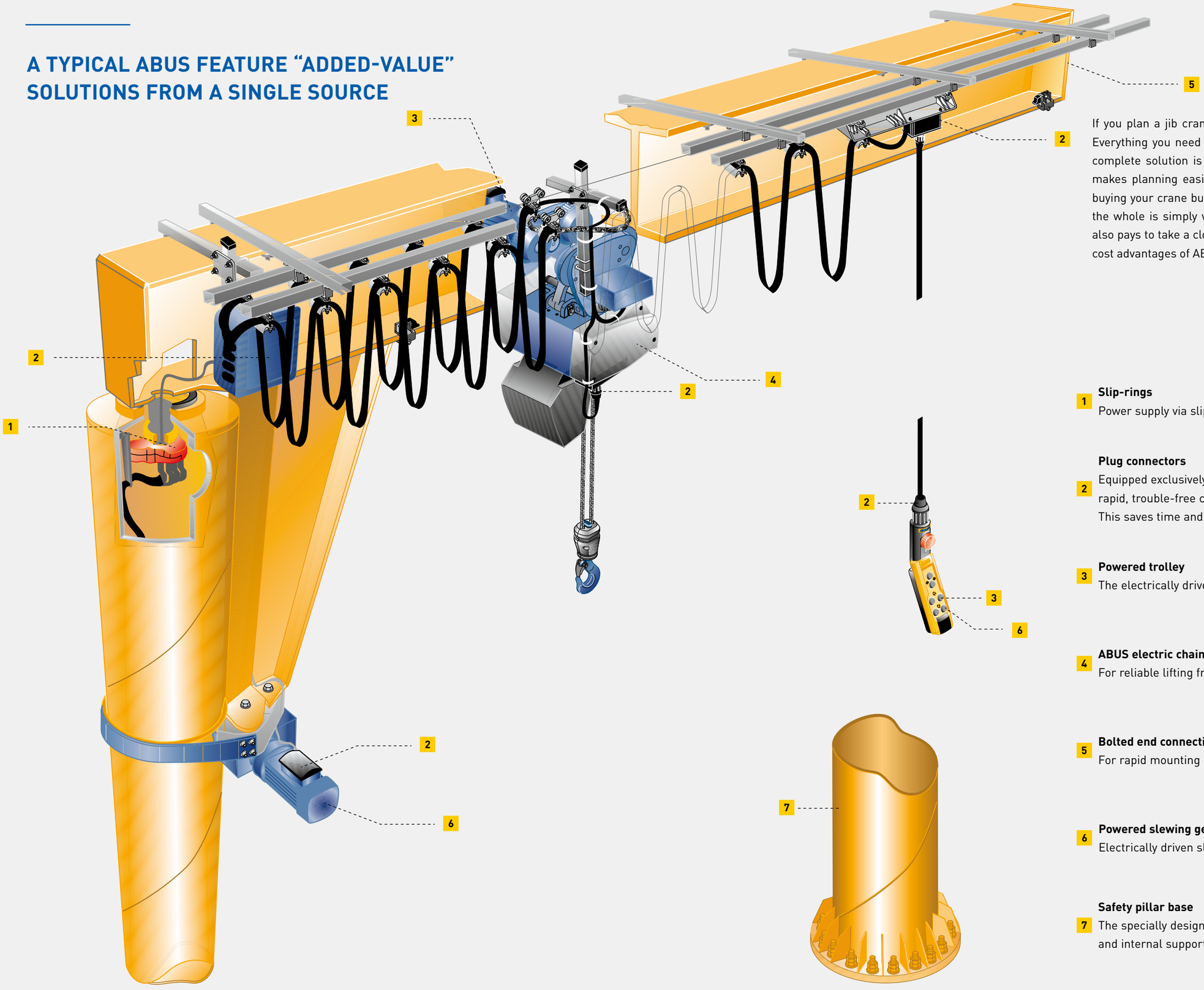

If you plan a jib crane with ABUS, there are really no limits. Everything you need to turn a single crane into a convenient complete solution is available – from a single supplier. This makes planning easier and helps cut costs – not only when buying your crane but also in the years which follow. Because the whole is simply worth more than the sum of its parts, it also pays to take a close look at the performance features and cost advantages of ABUS extras, components and accessories.

1 **Slip-rings**
Power supply via slip-rings for infinite 360° slewing.

2 **Plug connectors**
Equipped exclusively with plug connectors designed for rapid, trouble-free connection when installing and servicing. This saves time and ensures greater safety.

3 **Powered trolley**
The electrically driven trolley moves at the push of a button.

4 **ABUS electric chain hoist**
For reliable lifting from 80 kg to 4 t.

5 **Bolted end connection plate**
For rapid mounting of the trolley without prior disassembly.

6 **Powered slewing gear**
Electrically driven slewing for smooth travel.

7 **Safety pillar base**
The specially designed pillar base with precisely welded ribs and internal support ring ensures safety and stability.

ABUS JIB CRANES DAILY IN ACTION

Pillar jib crane LS with electric chain hoist ABUCompact GM2

Capacity: 100 kg
Jib length: 3 m
Overall height: 3,5 m

The pillar jib crane LS is typically used for lifting tasks that are mostly in the lower capacity range. As shown here in the example of transmission and engine manufacture, the load can be quickly and safely raised and e.g. set down on a pallet. The high lifting speed of 12 m/min with the electric chain hoist also contributes to efficient work performance. The crane is mounted on the existing base plate by means of an intermediate steel plate.

Wall jib crane LW with electric chain hoist ABUCompact GM2

Capacity: 250 kg
Jib length: 7 m
Lift height: 3,1 m

The wall jib crane LW is an unobtrusive and reliable aid when it comes to moving lighter loads by hand. Its lightweight design allows it and its load to be guided quickly and precisely even at longer jib lengths. This is an effective aid to daily operation – as in this case in the picking area for packaging machines. This crane is mounted with a bracket on the building support column. The brackets fit around the supports, even those with large crosssections, to bring the crane to the desired height.

Pillar jib crane LSX with electric chain hoist ABUCompact GM2

Capacity: 500 kg
Jib length: 3,2 m
Overall height: 3,4 m

The advantages of the pillar jib crane LSX are evident in workplaces with restricted room heights, as can be seen here in the measuring room for components of machine tools. Due to its special construction with the raised jib arm, a good lift height can be reached even with low ceilings. Jib arm and hoist are located at a safe distance away from the area in which the operator moves. The crane is mounted by means of a steel dowel plate with special floor dowels conforming to the permissible dynamic loads.

Wall jib crane LWX with electric chain hoist ABUCompact GMC

Capacity: 100 kg
Jib length: 3 m
Lift height: 2,5 m

Low ceilings and additional required floor clearance are typical criteria for selecting the LWX wall jib crane. Its low space requirements and practicable lift height make a strong argument in its favour. The continuously controllable ABUCompact GMC provides particularly delicate lifting and setting down of the load at this assembly station. The wall bracket included within the scope of supply is used to mount the crane on a steel support in the wall of the room.

ABUS JIB CRANES DAILY IN ACTION

Pillar jib crane VS with electric chain hoist ABUCompact GM8

Capacity: 2 t
Jib length: 7 m
Overall height: 6 m

Used in the assembly of road construction machines, this VS pillar jib crane moves larger loads that can no longer be safely and conveniently moved by hand. The crane is therefore equipped with electric, 2-speed drives for cross travel and slew. Operation is independent of the load position with mobile pendant controls that move parallel to the jib arm, simplifing handling and ensuring safer working. The crane is securely anchored to a base foundation.

Wall jib crane VW with electric chain hoist ABUCompact GM4

Capacity: 1 t
Jib length: 5 m
Lift height: 5,3 m

This crane is required in tank and container construction for transport of loads between work levels of different heights. The design of the wall jib crane VW enables the given building dimensions to be used to the fullest, so that the transfer of the load is achieved at the highest possible lift height. The crane has electric, 2-speed cross travel and slew drives, without which the desired movements of the load would be practically impossible. Weld-on plates are used to mount the crane directly on the steel supports of the building.

Pillar jib crane VS with electric wire rope hoist GM 1000

Capacity: 5 t
Jib length: 7 m
Overall height: 5 m

Plates and steel components of varying size and weighing up to 5t are required in mould and die production. With the pillar jib crane VS, these can be reliably moved. With electric, 2-speed cross travel and slew drives equipped as standard, the crane can be easily operated via the freely movable control unit with the pendant controls. The cone-shaped pillar tip allows the smallest possible approach dimension to the pillar even with high loads. The crane is solidly mounted on a large-sized base foundation with anchor rods.

Wall jib crane VW with electric wire rope hoist GM 800

Capacity: 3,2 t
Jib length: 5 m
Lift height: 3 m

Tight installation conditions, high load capacities and a precise movement of the load into the tool machine characterise this application example. The optimisation of the lift height at 3.2t is achieved through the use of an ABUS electric wire rope hoist. Two-speed control of electrically driven movements in all directions enables delicate handling of workpieces and equipment. The crane is mounted with weld-on plates at the back on the additionally placed support structure.

MOUNTINGS FOR PILLAR JIB CRANES A QUESTION OF STANDPOINT

Foundation block with anchor bolts

The currently most regularly requested type of mounting for pillar jib cranes uses anchor rods. These are positioned within a concrete foundation block. ABUS delivers the anchors and a steel template for positioning and aligning the anchor box as well as the required information for pouring a foundation with reinforcement in accordance with DIN 1045-1.

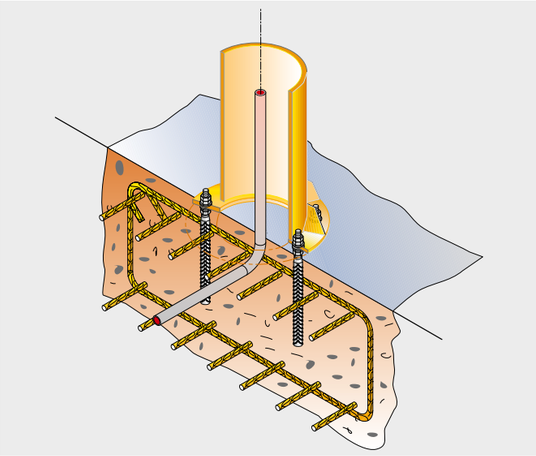

Foundation with ABUS ideal anchors

ABUS ideal anchors offer an intelligent mounting alternative whenever the later site of the crane is to remain freely walkable and drivable for the time being. The two-part anchor rods are connected to each other with sleeves. The sleeves are flush with the floor surface and are protected by cover caps. To mount the crane, threaded bolts are screwed into the sleeves.

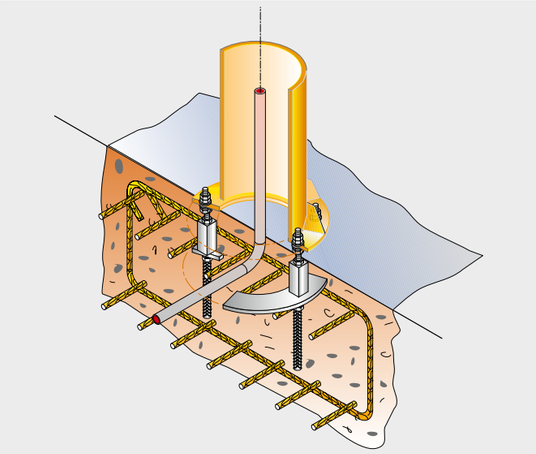

Intermediate plate on a concrete floor

Using a square intermediate plate, the crane can be mounted on a suitable existing concrete floor. After the floor plate has been drilled and chiselled out, anchors are inserted and cast. ABUS delivers the intermediate plate and, on request, the appropriate floor anchors.

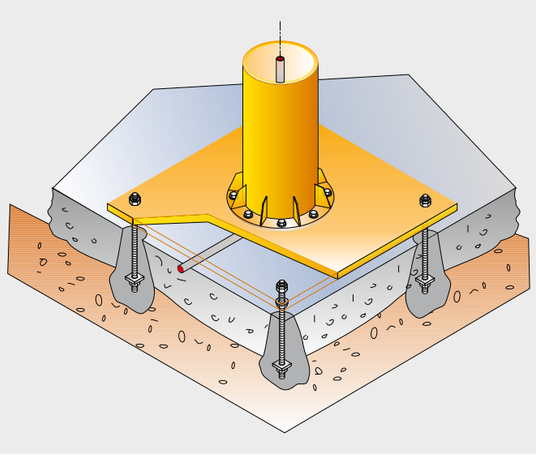

Intermediate plate on a concrete suspended ceiling

Alternatively, the intermediate plate can be mounted to a suitable concrete ceiling with through-wall anchors. ABUS delivers the intermediate plate and, on request, the appropriate through-wall anchors.

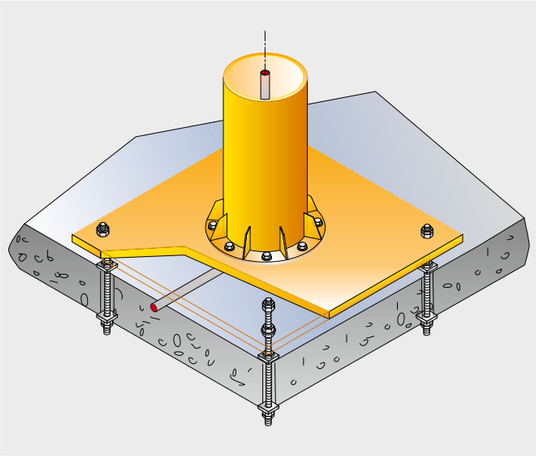

Dowel plate on a concrete floor/ ceiling (Reinforced standard concrete, cracked or non-cracked)

Pillar jib cranes of average Safe Working Loads are particularly efficient with our dowel mounting system.
This system uses Fischer dowels, especially developed for dynamic loads, which are fitted into the countersunk holes of the round dowel plate during install. ABUS delivers the dowel plate, the required anchor dowels as well as a grouting ring.

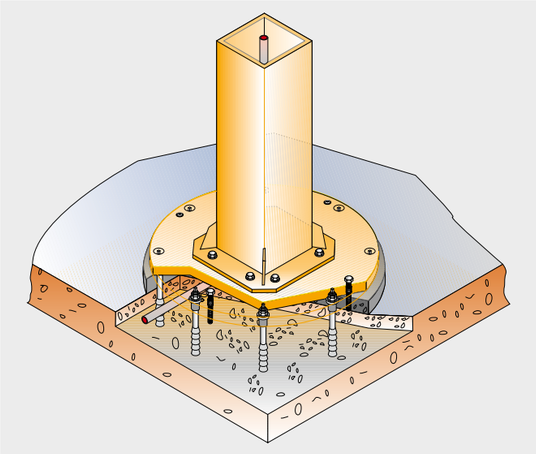

Alignment and underpouring

Safety while working requires the careful alignment of a crane prior to initial operation. The existing floors are not always level enough to ensure this. All mounting systems of our pillar jib cranes therefore offer the necessary room for adjustment through an assembly gap. The subsequent grouting of the crane ensures stability.

MOUNTINGS FOR WALL JIB CRANES ADAPTED FLEXIBILITY

On steel supports using wall bracket/mounting

The simplest type of mounting of wall jib cranes is the bolting onto existing steel supports. For this, the supports must be of structurally sufficient size (they may need to be reinforced) and exhibit a sufficiently wide connection surface. All ABUS wall jib cranes include this mounting option in the scope of delivery of standard equipment. For types LW and LWX this is provided through the wall bracket and for type VW through direct bolting on of both wall mountings.

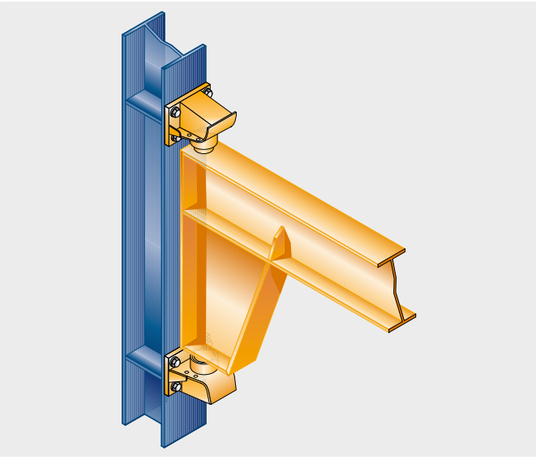

On reinforced concrete walls or supports using weld-on plates

Concrete walls or supports can be prepared for the mounting of wall jib cranes on weld-on plates through suitable mounting plates with grouted anchoring as a substructure. When performing this construction work, care should be taken that the mounting plates lie exactly flush and exhibit plumb-vertical connection surfaces. The weld-on plates are welded to the substructure. The wall bracket or the wall mountings of the crane are bolted onto the weld-on plates. ABUS delivers the weld-on plates with the required mounting screws.

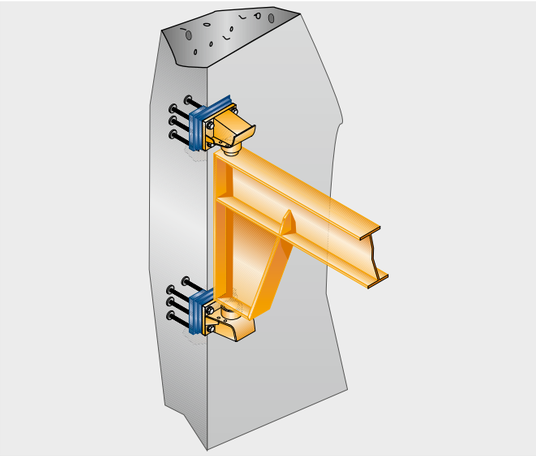

On steel supports using weld-on plates

Weld-on plates can be welded directly onto steel supports or load-bearing steel structures providing holes will not or cannot be drilled through them. (not pictured)

On reinforced walls using wall brackets and through-wall anchors

For mounting on reinforced concrete walls of adequate load-bearing capacity, wall brackets are used. For the types LW and LWX, the wall bracket is included in the scope of delivery. For the type VW, it is available as optional equipment. The wall brackets are mounted on the wall with ties and counterplates. Included in the ABUS scope of delivery are the anchor rods, counterplates and the required mounting materials, all adapted for the respective wall thickness.

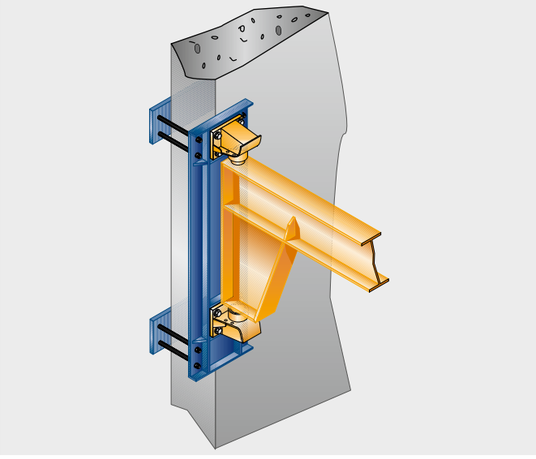

On reinforced concrete supports

On structurally suitable, square or rectangular reinforced concrete supports which can be freely enveloped, wall jib cranes can be mounted with brackets:

via embracing brackets
if the columns can be fully embraced without obstruction. The required tension forces can be applied through threaded rods to hold the crane securely to the support at the desired height.

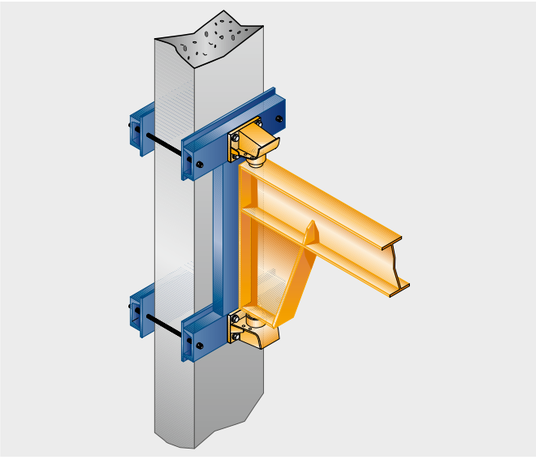

via 3-sided column bracket

if the columns cannot be embraced at the rear. For fixing, the column is drilled through horizontally at two positions with a core drill.

ABUS supplies the bracket version designed to suit the column dimensions with the required fixing components and the anti-slip devices.

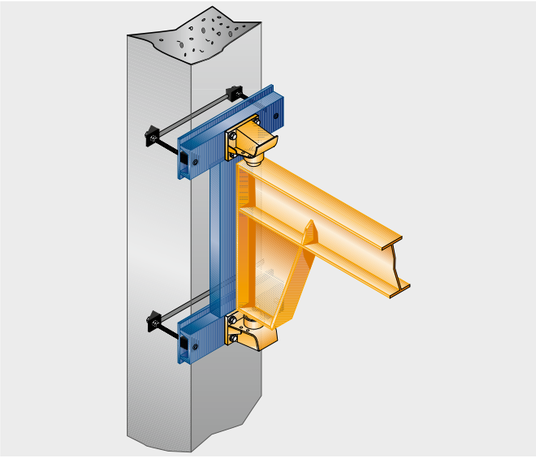

Structural inspection of the building

Jib cranes transfer forces and torque to the building and supporting structures. Safe crane operation depends entirely on the adequate checking of the support structure by a structural engineer.

OPTIONAL CONFIGURATIONS
SOUND INDIVIDUAL SOLUTIONS

Powered trolley (Fig. 1)

Powered slewing (Fig. 2)

Powered slewing (Fig. 3)

Slewing limit stop – bumper rod (Fig. 4)

Slewing limit stops, adjustable (Fig. 5)

Slewing limit switch, VS (Fig. 6)

Slewing limit switch, VW (Fig. 7)

Limit switch for cross travel (Fig. 8)

Adjustable brake, VS (Fig. 9)

Slewing resistance control, VW (Fig. 10)

Mobile control unit (Fig. 11)

Remote control ABURemote (Fig. 12)

Jib crane with additional power socket and plug on hoist (Fig. 13)

Safety load hooks (Fig. 14)

Optional configuration supply overview*

Function/ Functional unit	Optional configuration	LS	LSX	VS	LW	LWX	VW	Recommendation (R)/Note (N)	Fig.
Electric drives	Cross travel, 2-speed, 5/20 m/min	-	x	x	-	x	x	(R) loads of 500 kg or more and jib lengths longer than 4 m	1
	Electric slewing gear, 2-speed	-	-	x	-	-	x	(R) loads of 500 kg or more and jib lengths longer than 6 m	2/3
Travel limiters	Slewing limit stop as bumper rod	-	x	x	-	x	x	(N) on-site limit stop required	4
	Adjustable slewing limit stops	x	x	x	x	x	-	(N) available for simple retro-fitting	5
	Slewing limit switch	-	-	x	-	-	x	(N) braking function, braking and shutdown function	6/7
	Cross travel limit switch	-	x	x	-	x	x	(N) braking function, braking and shutdown function	8
	Limit switch for electric chain hoist	x	x	x	x	x	x	(N) programmable upper and lower switch-off position via "teach-in" function	-
Slewing resistance	Adjustable brake / slewing resistance control	-	-	x	-	-	x	(N) not with electrically driven slewing	9/10
Operation	Mobile control unit runs length of jib	-	-	x	-	-	x	(R) for electric trolleys and slewing	11
	Controls on load hook	x	x	x	x	x	x	(N) lift/lower only, max. 250 kg, 1-fall hoist (GM2/GM4)	-
	Remote control ABURemote	x	x	x	x	x	x	(N) observe regulations for safety devices	12
Control	Electronic control / contactor control, 48 V electric chain hoist	x	x	x	x	x	x		-
	Electronic control / contactor control, 48 V trolley travel / slewing	-	x	x	-	x	x		-
	Infinitely variable hoist speed via frequency converter	x	x	x	x	x	x	(R) for particularly delicate lifting and lowering of the load	-
	Infinitely variable hoist trolley and slew drive motions	-	-	x	-	-	x	(R) for particularly delicate moving of the load	-
Electric chain hoist	3/N/PE connection plug for auxiliary device	x	x	x	x	x	x	(N) only with direct control lift/lower (N) with type VS only with mechanical slewing limits	13
	Hours in operation counter	x	x	x	x	x	x		-
	Safety load hooks	x	x	x	x	x	x		14

* Some combinations of optional component configurations may not be compatible. Advice freely available upon request.

ABUS HOISTS
POWERHOUSES FOR MORE THAN JUST JIB CRANES

ABUS electric chain hoists

Among the powerhouses of the ABUS jib cranes are the ABUS electric chain hoists ABUCompact. The hoists of the ABUS chain hoist generation ABUCompact are distinguished by a fresh design and convincing technical features. In connection with jib cranes, the chain hoists GM2, GM4, GM6 and GM8 with 3 Ph/400V offer reliable power packs for load capacities to 4t in a particularly low headroom design for optimum utilisation of space. They also boast a precision lifting function for careful raising and lowering of sensitive goods. The modular construction of motor and gear units opens the stage for a comprehensive range of products with lift speeds of up to 20m/min or FEM classifications to 4m – at a persuasive price.
The smaller GMC rounds out the ABUCompact series. A continuous lift speed for 125 or 250kg, and the fact that it is delivered ready for connection to a 230V socket, makes it the ideal chain hoist for flexible application in lifting lighter loads.

In addition, there are advantages that are especially appreciated in practice: minimal maintenance work required due to especially durable brake linings (in normal cases, 1 million full load brakings until the first readjustment), lifetime lubrication of precision gear units, adjustable slipping clutch, specially hardened low-wearing chain, plug connectors for safe mounting or inspection, and much more.

For more information, please refer to our product brochure "ABUS Electric Chain Hoists".

ABUCompact GMC

ABUCompact GM2

ABUCompact GM4

ABUCompact GM6

ABUCompact GM8

ABUS Electric wire rope hoist design "E" monorail trolley

The ABUS electric wire rope hoists GM cover the essential load range from 1 to 120 tonnes. Five basic models are available, all with main and precision lifting speeds as standard equipment. And these units are compact. All components feature endurance – from motors to wire ropes, from gear units to brakes, from power systems to electronic circuitry.

For more information, please refer to our product brochure "ABUS Wire Rope Hoists".

ABUS Electric wire rope hoist design "E"

ABUS CRANE SYSTEMS
OVERALL PLANS OUTLINED IN DETAIL

ABUS has specialised in floor-free lifting and conveying technology to 120t – deliberately. Not only because this load range represents the vast majority of applications, but also in order to pass onto you the economic benefits of product standardisation to the full. ABUS offers a comprehensive range of economical and quickly available materials handling solutions: overhead cranes, jib cranes, HB light crane track systems, lightweight mobile gantries, monorail hoists, electric wire rope hoists, electric chain hoists and a wide variety of components. The range thus extends from solutions for extraordinary applications to the implementation of complete material handling systems. Add to this the special self-conception of ABUS: When we offer something, we offer it based on advice that focuses on practical use, with assured quality, with individual user support and comprehensive, fast and reliable service with 24-hour availability.

ABUS Crane systems and components:

Overhead cranes

Jib cranes

HB light crane track systems

Lightweight mobile gantry LPK

Electric Wire Rope Hoists

Electric Chain Hoists and High-Performance Components

COMPLETE SOLUTIONS FROM ABUS

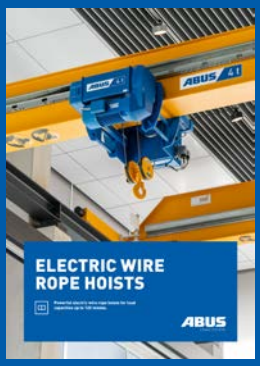

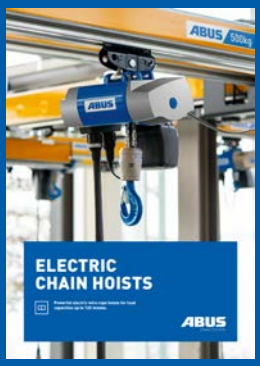

You can find further product information on our entire product portfolio at:
www.abuscranes.co.uk/downloads

PUBLISHER
ABUS Crane Systems Ltd.
Unit 1 Business Village
Blackbushe Business Park
Yateley · Hampshire GU46 6GA

Tel: (01252) 749 000
Email: info@abuscranes.co.uk

www.abuscranes.co.uk

ABUS
CRANE SYSTEMS

02.26