ELECTRIC CHAIN HOISTS

Product information

ABUS
CRANE SYSTEMS

DESCRIPTION OF THE STANDARD EQUIPMENT

The new generation of ABUCompact chain hoists feature a fresh new design and convincing technical solutions. The 3 phase 400 volt hoists units are available in four different sizes to reliably handle loads from 80 kg through 4000 kg. The motor and the gear unit are of modular design, allowing us to produce a wide variety of versions for lifting speeds up to 20 m/min and FEM groups up to 4m at attractive prices. Details of the ABUS electric chain hoist range and introduction dates are given in the selection table. Why not take advantage of the additional features described from page 6 onwards. The small GMC hoist rounds off the ABUCompact range. With infinitely variable lifting speed and a load capacity of 125 kg or 250 kg, this unit, supplied ready for connection to a 230 V power socket, is the ideal hoist for flexible and low capacity applications.

ABUCompact GMC

Scope of supply: electric chain hoist with pendant control handset and cable, ready to connect up to start work with its chain collector, chain, approximately 3 meters of mains power cable and connection already fitted.

- hoist body finish painted RAL 5017 (traffic blue)
- hinged, removable suspension bracket
- operating voltage: single-phase AC, 230 V, 50 Hz
- degree of protection IP 21, insulation class F
- operation via pendant control handset complete with emergency stop button, degree of protection IP 65
- infinitely variable lifting speed
- electronic control
- overload protection by slipping clutch with fixed adjustment
- high-strength, galvanized profile steel chain with chain container
- Hook path 3 – 20 m at 125 kg; 3 – 10 m at 250 kg
- pendant control cable to suit hoist hook path
- plug and play connections

ABUCompact GM2 to GM8

Scope of supply: electric chain hoist with pendant control handset and cable, ready to connect up to start work with its chain collector, chain and mains connection already fitted.

- hoist body finish painted RAL 5017 (traffic blue)
- hinged, removable suspension bracket
- operating voltage: 3-phase AC, 380 to 415 V, 50 Hz
- degree of protection IP 55, insulation class F
- operation via pendant control handset complete with emergency stop button, degree of protection IP 65
- direct control for GM2 / GM4 / GM6
  48 V contactor control with semiconductor technology for GM8
- quick plug-type connections with twist lock
- 2 lifting speeds (main and precision lift)
- overload protection with externally adjustable slipping clutch
- high-strength, galvanized profile steel chain with chain container
- Hook path from 3 m
- pendant control cable to suit hoist hook path

TECHNICAL DETAILS & USEFUL INFORMATION ON THE ABUCOMPACT GM2 TO GM8

Construction and safety regulations

Compliance with the provisions of the EU directives and the applicable harnonised standards. Compliance with the Accident Prevention Regulations DGUV Regulation 54 and Product Safety Law.

Motor and gear unit

The motor and gear units are of modular design, allowing a variety of combinations for different lifting speeds. All the motors used are sturdy squirrel-cage units with 2-pole and 8-pole windings and the gear unit is separately encapsulated. This ensures considerable benefits for installation and maintenance. The permanently lubricated spur gear features bevelled gear wheels and roller bearings for smooth running.

Integrated safety brake

The DC disk brake features asbestos-free brake linings with a long service life (a million braking operations up to the first adjustment). The adjustable brake is designed for a very short run-on.

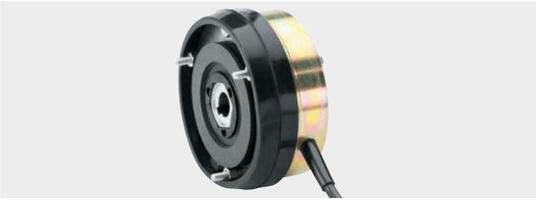

Suspension bracket

The removable, hinged suspension bracket is designed for easy suspension and removal of the hoist. The bracket ensures that the hoist is positioned in a fixed direction. On GM2 and GM4 hoists, the bracket is designed for installation in two positions, with an angle of 90° between them. Without the suspension bracket, the hoist may also be rigidly fixed by other means. The reduced installation spacing then allows an increase in the lifting height.

2 lifting speeds

Two lifting speeds, one for fast lifting and one for precision positioning, are a standard feature. The speed ratio (precision:main lift) is 1:4 for the GM2, GM4 and GM6 and 1:6 for the GM8.

TECHNICAL DETAILS & USEFUL INFORMATION ON THE ABUCOMPACT GM2 TO GM8

Chain system

The chain system consists of a high-precision chain sprocket entirely surrounded by the chain guide. Both the chain sprocket and the chain guide are of modular design, allowing easy replacement without the need to spend time and money dismantling the hoist to reach the parts.

Slipping clutch

The slipping clutch offers reliable protection against overloading. Special linings designed for minimum wear ensure high safety levels over the entire service life of the unit. The slipping clutch is designed for easy external adjustment.

Rotating hook block (single fall)

The hook block is designed to rotate on the chain. The hook and the hook block form a single, torsionally stable unit. The load can be effectively guided and oriented using a hand on the hook block.

Quick plug-type connectors

The power supply and the control unit are connected up using quick plug-type connectors with twist locks. The connection is firm and confusion is not possible. These connectors save time and make installation and maintenance work safer.

48 V semiconductor control

The electronic control features no-wear semiconductor technology. This configuration allows considerable weight and space savings compared with mechanical contactors. (Standard equipment for GM8, optional for GM2, GM4 and GM6).

Profile steel chain

The specially hardened galvanized steel profile chain allows loads about 25 % higher than a round steel chain of the same nominal dimensions. The larger area surface of the chain links has a positive effect on material wear properties. In practice, safety levels are improved and the service life of the chain is prolonged.

Sheathed control line

No external strainer cable is required as strain relief properties are built into the sheathing of the robust pendant cable. Tensile forces are absorbed by the specially coated fabric of the sheath. The conductors inside the sheath can move freely and are effectively protected against mechanical damage.

Operation via pendant control

ABUCompact hoists are controlled from ground level using ergonomically designed ABUCommander pendant controls with 2-stage push buttons and large emergency stop switches. The pendant control is connected using quick plug-type connectors with twist locks (bayonet locks).

OPTIONAL EXTRAS FOR MORE CONVENIENCE

Operating hours meter

An operating hours meter allows a realistic assessment of the work actually performed by a hoist. The operating hours indicated can be used for calculating the remaining service life of the hoist in accordance with FEM 9.755. With an operating hours meter, longer safe working periods are normally possible.

ABUliner frequency converter for lifting and lowering

Infinitely variable speed control for the smooth handling of sensitive products such as glass or ceramics or long, bulky loads. The ABUliner also allows precise positioning for tricky assembly and joining operations. For additional safety, the frequency converter features an electronic shutdown system with two programmable shut-down points that can be set via the pendant control.

Cruciform limit switch for trolley travel

These switches can be used to slow the trolley to a lower speed ahead of the end stops. When the trolley has passed the limit switch, it can be moved back in the other direction at low speed. This option is only available in combination with a contactor-type control system/semiconductor control system.

Alternative: Deceleration to low trolley travel speed followed by shut-down at the end of trolley travel before the end stops are reached. When the trolley has passed the limit switch, it can be moved back in the other direction at high speed.

48 V semiconductor control for lifting and lowering

The electronic control system features advanced, no-wear semiconductor technology and is integrated in the hoist. This configuration features considerable weight and space savings compared with conventional mechanical contactors. The control voltage is 48 V.

Alternative: semiconductor control for lifting/lowering and cross travel. Extended semiconductor electronic control system also incorporating cross travel control functions. If this option is selected for a GM2 hoist, the control system is installed in an additional housing on the hoist.

Electronic limit switch (two positions)

The electronic limit switch features two programmable shut-down points for even safer operation. The shut-down points for highest and lowest hook position can be programmed individually using a teach-in button on the pendant control. When the shut-down point is reached, the lifting or lowering movement is stopped. This option is only available in combination with a 48 V semiconductor control system.

Alternative: limit switch with two additional switching points This option features two additional switching points between the highest and lowest hook position. These can be used as stop-and-go points during operation.

Additional power socket on hoist

This option includes an additional 5-pole (3/N/PE) power socket on the hoist for ancillary equipment. The socket is connected upstream from the emergency stop switch and the ancillary equipment therefore remains in operation following an emergency stop. Easy connection and disconnection is possible. Depending on the individual application, it may be necessary to provide a 5-pole power supply. (This option is only available in combination without electric cross travel and with direct control)

Radio remote control ABURemote AC

The radio remote control ABURemote AC has a range of over 50 m. The complete scope of supply for this control consists of a light, ergonomic hand-held transmitter, a set of rechargeable batteries, an inductive charging cradle with wall mounting bracket, a protective bag with shoulder strap and belt clip and a receiver with integrated horn. This is attached to the chain hoist and is immediately ready for use. The radio control can be used for electric chain hoists with 48 V control voltage both for lifting/lowering and additionally for powered cross travel. For electric cross travel, limit switches are required for switching the cross travel movement to slow and then stop.

OPTIONAL EXTRAS FOR MORE CONVENIENCE

Suspension hook

For mobile use

Safety load hook

Reliable secured closing under load

ABUS PUSH TROLLEYS & ELECTRIC TROLLEYS

ABUS HF push trolleys

- sturdy design with roller bearings
- virtually no maintenance required
- machined rollers
- fitted with drop stop and wheel climb prevention lugs
- colour RAL 5017 (traffic blue), suits many different chain hoist models
- adjustable for flange widths from 42 to 400 mm
- for curved tracks up to 2 t

ABUS EF electric trolleys

- sturdy design with roller bearings
- virtually no maintenance required
- speed 5/20 m/min
- high-quality standard drive system
- degree of protection IP 55
- durable electromechanical disk brake
- machined rollers
- fitted with drop stop and wheel climb prevention lugs
- colour RAL 5017 (traffic blue), suits many different chain hoist models
- adjustable for flange widths from 64 to 400 mm
- for curved tracks up to 2 t

Anti-collision protection

- Mechanical anti-collision protection between two adjacent push-pull (HF) or electrically powered (EF) hoist trolleys on the same beam

OPTIONAL EQUIPMENT AT A GLANCE

Options (Equipment package)	Electric movements H/S Lifting/lowering H/S/KF Lifting/lowering/ trolley travelling	Possible scope of supply GM2	GM4	GM6	GM8	Notes on scopae of supply
Additional connector plug for auxiliary equipment, 3 ph / N / PE	H/S	X	X	X	-	5-pole power supply and direct control required
Connector plug BJS24 for control cable on site	H/S/KF	X	X	X	X	
Electric trolley travelling control extension	H/S/KF	X	X	X	X	Pendant control with additional buttons, trolley motor cable, electrical system, GM8 with 48 V semiconductor control
Semiconductor control (HAC)	H/S	X	X	X	Standard	48 V control voltage
	H/S/KF	X (Z)	X	X	Standard	
Hoist limit switch						
electronic						
2 shut-down points	H/S	X	X	X	X	Pendant control with teach-in button. Alternative: teach-in connector, incl. 48 V semiconductor control
	H/S/KF	X (Z)	X (Z)	X	X	
electromechanic						
2 shut-down points	H/S	-	X	X	X	Version for external control; supply without control cable and without push button pendant
	H/S/KF	-	X	X	X	
4 shut-down points	H/S	-	X	X	X	
	H/S/KF	-	X	X	X	
ABUliner frequency converter	H/S	X (Z)	X (Z)	X (Z)	X (Z)	Infinitely variable lifting speed, incl. electronic hoist limit switch and hours in service counter
	H/S/KF	on request	on request	on request	on request	
Radio remote control						
ABURemote AC Range over 50 m	H/S	X	X	X	X	Including 48 V semiconductor control voltage and warning horn
	H/S/KF	X (Z)	X	X	X	Including 48 V semiconductor control voltage, cross travel limit switch and warning horn
Special voltages	H/S H/S/KF	X	X	X	X	Additional equipment for special voltages only on request

Based on standard hoists:
stationary type, pendant control for lifting/lowering,
control from trolley,
operating voltage 3~380-415 V/50 Hz
GM2, GM4, GM6: direct control
GM8: 48 V semiconductor control

Possible scope of supply:

X Can be supplied as additional equipment, additional charge applies

(Z) Chain hoist with additional housing for extended electric/electronic equipment; For version with frequency converter supplemented by brake resistor; please note larger installation dimensions!

– not available

Options (individual)	Electric movements H/S Lifting/lowering H/S/KF Lifting/lowering/ trolley travelling	Possible scope of supply GM2	GM4	GM6	GM8	Requirements
Operating hours meter	H/S H/S/KF	X	X	X	X	Only for an operating voltage of 380 - 415 V / 50 Hz; for GM2 housing extension necessary
Control via operational element on hook (larger C dimensions)						
Hook path 3000 mm	H/S	X	X	-	-	GM2 with direct control or 48 V semiconductor control; GM4 only with 48 V semiconductor control; Load hook not rotating; Chain hoist single fall max. load capacity 250 kg
Hook path 4000 mm	H/S	X	X	-	-	
Hook path 5000 mm	H/S	X	X	-	-	
Hook 250 kg, rotatable	Order N° 103427	X	X	X	X	To complement the operational element
Coupling pin 250 kg	Order N° 82276	X	X	X	X	
Safety hook (larger C dimensions)						
Single fall	H/S H/S/KF	X	X	X	X	
Double fall	H/S H/S/KF	X	X	-	-	
Retrofitting radio remote control						Chain hoist with 48 V semiconductor or contactor control
ABURemote AC Range over 50 m	H/S	X	X	X	X	
	H/S/KF	X (Z)	X	X	X	Trolley travel limit switch required
Trolley travel limit switch	H/S/KF	X	X	X	X	Chain hoist with 48 V semiconductor/contactor control
Spring reel for use at different operating levels						
Extension length 3000 mm Load capacity 6 kg	H/S H/S/KF	X	X	X	X	Fitted directly to the chain hoist
Extension length 4500 mm Load capacity 8 kg	H/S H/S/KF	X	X	X	X	
Connecting cable	Order N° 316482	X	X	X	X	10 m length with CEE plug and mains plug

Reduced equipment						Notes on scope of supply always including main connection plug
No pendant control, no control cable	H/S H/S/KF	X	X	X	X	including connector for control cable
		X	X	X	X	without connector for control cable
External control	H/S H/S/KF	X	X	X	X	Version for external control; delivery without control cable, without push button pendant
Suspension hooks		GMC	GM2	GM4	GM6	
		X	X	X	X	

SELECTION TABLES
TYPE DESIGNATION

Electric chain hoists (operating voltage 400 V, 50 Hz, 3-phase)

Main lifting speed	3 m/min	4 m/min	5 m/min	6 m/min		8 m/min		10 m/min		12 m/min	16 m/min	20 m/min
No. of falls	2	2	2	1	2	1	2	1	2	1	1	1
Load capacity (kg) 80				GM2(4m)		GM2(4m)		GM2(4m)		GM2(4m)	GM2(4m)	GM2(3m)
100				GM2(4m)		GM2(4m)		GM2(4m)		GM2(4m)	GM2(3m)	GM2(2m)
125				GM2(4m)		GM2(4m)		GM2(4m)		GM2(3m)	GM2(2m)	
160	GM2(4m)	GM2(4m)	GM2(4m)	GM2(4m)	GM2(4m)	GM2(4m)	GM2(3m)	GM2(3m)	GM2(3m)	GM2(2m)		
200	GM2(4m)	GM2(4m)	GM2(4m)	GM2(3m)		GM2(3m)		GM2(2m)	GM2(2m)			
250	GM2(4m)	GM2(4m)	GM2(4m)	GM2(2m)	GM2(3m)	GM2(2m) GM4(4m)	GM2(2m)	GM4(4m)		GM4(4m)	GM4(3m)	GM4(2m)
320	GM2(4m)	GM2(4m)	GM2(3m)	GM2(1Am)	GM2(2m)	GM4(4m)		GM4(4m)		GM4(3m)	GM4(2m)	
400	GM2(3m)	GM2(3m)	GM2(2m)			GM4(3m)		GM4(3m)		GM4(2m)		
500	GM2(2m)	GM2(2m) GM4(4m)	GM4(4m)		GM4(4m)	GM4(2m)	GM4(3m)	GM4(2m)	GM4(2m)			
630	GM2(1Am)	GM4(4m)	GM4(4m)	GM6(4m)	GM4(3m)	GM4(1Am) GM6(4m)	GM4(2m)	GM6(4m)		GM6(3m)	GM6(3m)	
800		GM4(3m)	GM4(3m)	GM6(3m)	GM4(2m)	GM6(3m) GM8(3m)		GM6(3m) GM8(3m)		GM6(2m) GM8(3m)	GM8(3m)	GM8(2m)
1000		GM4(2m)	GM4(2m)	GM6(2m)		GM6(2m) GM8(3m)		GM6(2m) GM8(3m)		GM8(3m)	GM8(2m)	
1250	GM6(4m)	GM4(1Am) GM6(4m)	GM6(4m)	GM6(1Am)	GM6(3m)	GM6(1Am) GM8(3m)	GM6(3m)	GM8(2m)		GM8(2m)		
1600	GM6(3m)	GM6(3m) GM8(3m)	GM6(3m) GM8(3m)		GM6(2m) GM8(3m)	GM8(2m)	GM8(3m)	GM8(1Am)	GM8(2m)			
2000	GM6(2m)	GM6(2m) GM8(3m)	GM6(2m) GM8(3m)		GM8(3m)	GM8(1Am)	GM8(2m)					
2500	GM6(1Am)	GM6(1Am) GM8(3m)	GM8(2m)		GM8(2m)							
3200		GM8(2m)	GM8(1Am)									
4000		GM8(1Am)										

Electric chain hoists (operating voltage 230 V, 50 Hz, 1 phase)

Main lifting speed	6 m/min	12 m/min
No. of falls	2	1
Load capacity 125 kg		GMC (1Am)
Load capacity 250 kg	GMC (1Am)	

Explanation of the type designation

Hoist — Trolley (optional)

GM 2 320. 6 – 1 / EF 14

- 14 — Size
- EF — Model
- 1 — No. of falls
- 6 — Main lifting speed, m/min
- 320. — Load capacity, kg
- 2 — Size
- GM — Series

LONGER HOOK PATHS / CONTROL CABLES

GM2

Model	No. of falls	Hook path mm	Chain container size
GM2	1	3000 - 4000	1
		5000 - 10000	3
		11000 - 24000	4
		25000 - 32000	6
	2	3000 - 5000	3
		6000 - 12000	4
		13000 - 16000	6

GM4

Model	No. of falls	Hook path mm	Chain container size
GM4	1	3000 - 4000	3
		5000 - 10000	4
		11000 - 24000	6
		25000 - 50000	7
	2	3000 - 5000	4
		6000 - 12000	6
		13000 - 25000	7
		-	-

GM6

Model	No. of falls	Hook path mm	Chain container size
GM6	1	3000 - 8000	5
		9000 - 20000	6
		21000 - 35000	7
		-	-
	2	3000 - 4000	5
		5000 - 10000	6
		11000 - 17500	7

GM8

Model	No. of falls	Hook path mm	Chain container size
GM8	1	3000 - 6000	7
		7000 - 16000	8
		17000 - 25000	8-600
		26000 - 32000	8-800
	2	3000	7
		4000 - 8000	8
		9000 - 12000	8-600
		13000 - 16000	8-800

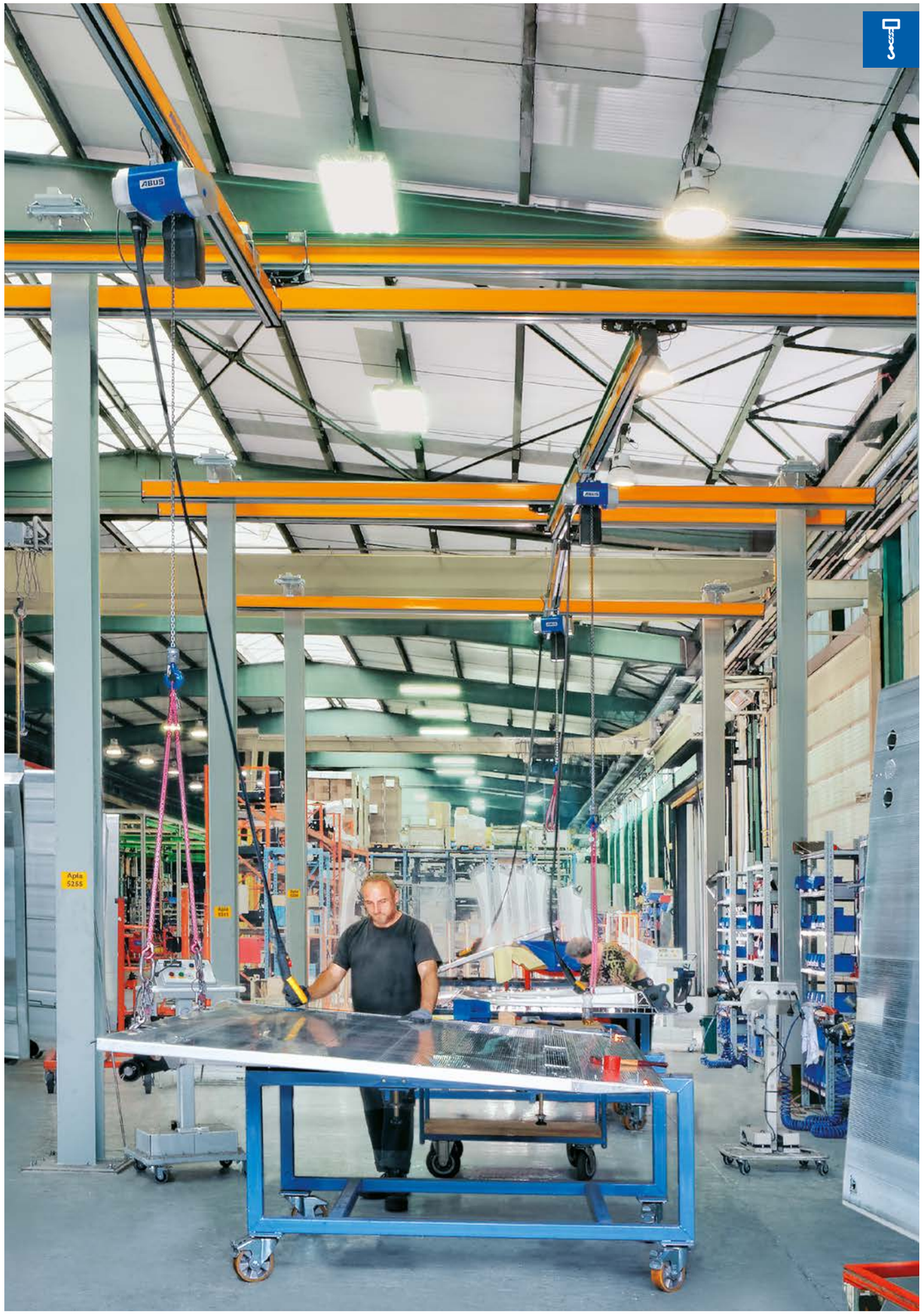

ABUS CLAMPING BUFFERS AND TROLLEY CURRENT COLLECTORS

Selection table for shaped clamping buffers

Type Size	Dimensions, mm							Weight kg
	b	c	d	Gummi				
				a	e	g	k	
alpha	110	20	63	45	40	15	26	2,6
beta	170	32	90	80	60	35	30	5,9

Type designations	Beam		For use with ABUS electric chain hoists	Ref.
	Flange width range mm	Flange thickness mm		
alpha	64 – 120	5,7 - 20,5	≤ 2,5 to	37329
	121 – 190			37434
	191 – 243			37435
	244 – 300			37443
beta	110 – 160	11,5 - 30	≤ 4 to	37444
	161 – 230			37445
	231 – 283			37446
	284 – 340			37447
	341 – 405			37448

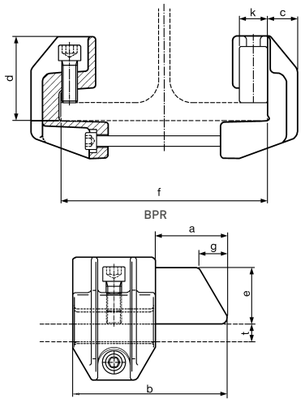

Can be used with S 235 parallel flanged beams (free fom oil and grease) and for trolleys with a max. travel speed of 36 m/min.

Note: For buffering a trolley on both sides, 2 clamping buffers are required.

ABUS trolley current collectors	Weight	Order N°
For the festoon power supply system	3,7 kg	309728
For the power conductor type KBH	2,4 kg	309729

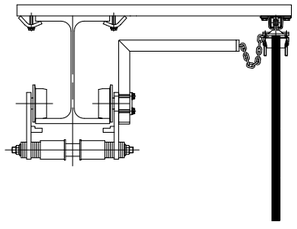

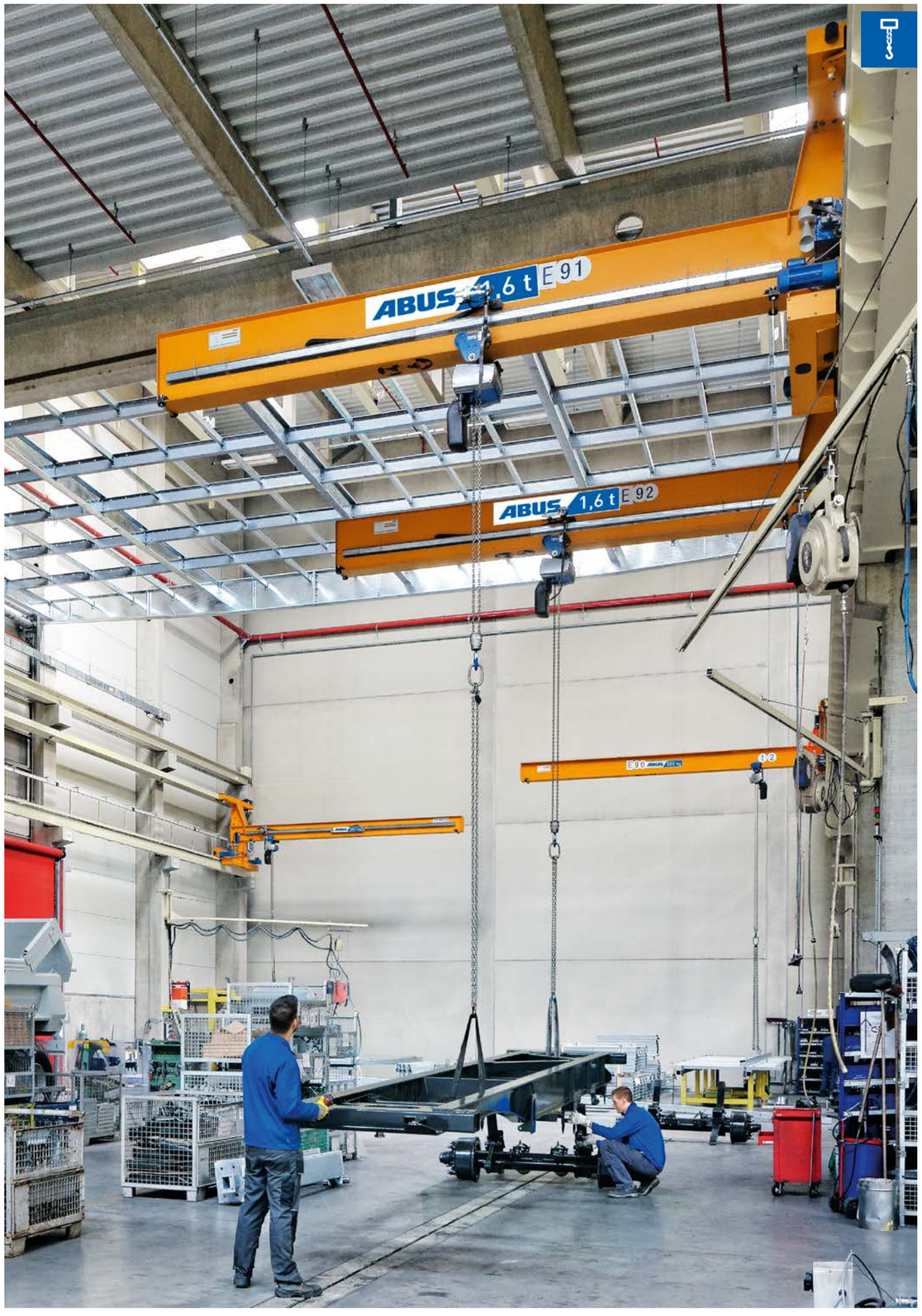

ABUS FESTOON POWER SUPPLY SYSTEM FOR TRACK LENGTHS UP TO 30 M

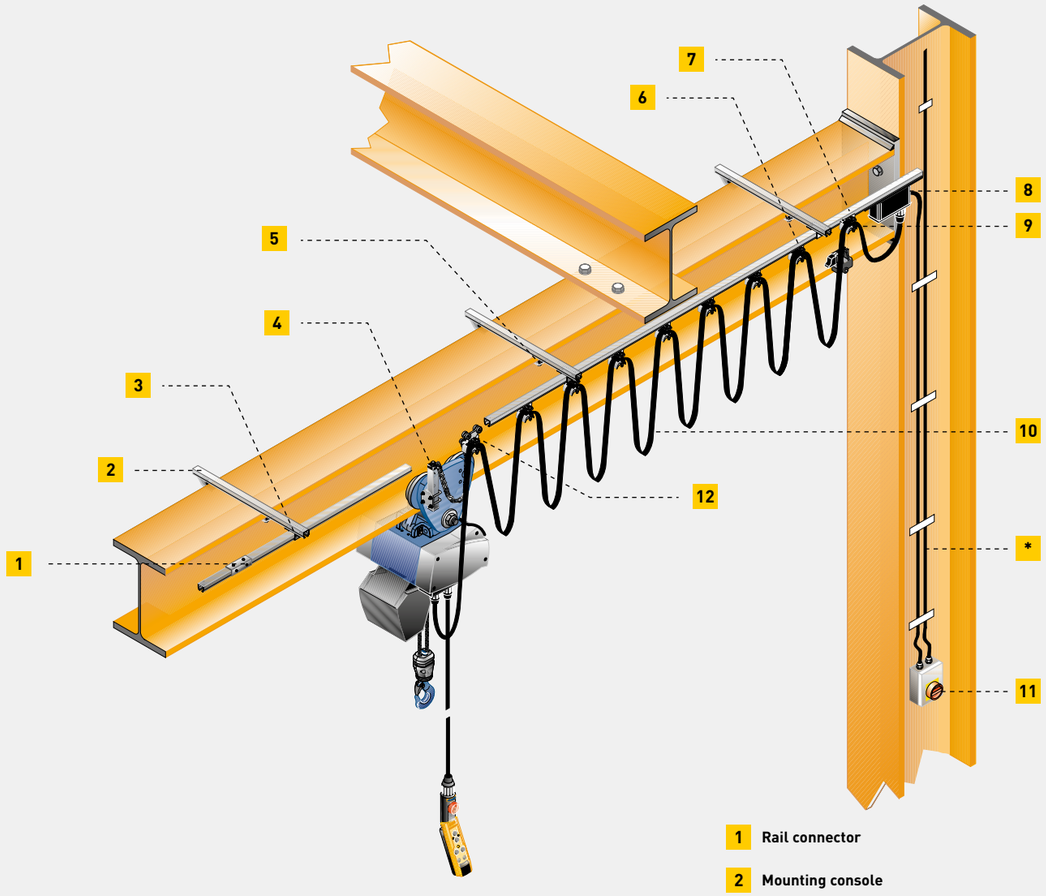

Fixed components	Length-dependent components
Transitional terminal box, end clamp, current collector carrier, mains switch, trolley current collector	Flat cable carriers, flat cable, rails, rail supports, rail connectors, mounting consoles, clamping brackets

*The riser cable from the mains switch and cabling from the mains switch to the terminal box, including accessories, are not included in the scope of supply.

The voltage drop must be taken into consideration for the design of the festoon system. The festoon system is prefabricated, i.e. supplied with the flat cable on the cable carriers, current collector carrier and end clamp.

1 **Rail connector**
2 **Mounting console**
3 **Rail support**
4 **Trolley current collector**
5 **Clamping brackets**
6 **Flat cable carrier**
7 **Rail**
8 **Transitional terminal box (flat/round cable)**
9 **End clamp**
10 **Flat cable**
11 **Mains switch**
12 **Current collector carrier**

ABUS POWER SUPPLY SYSTEM WITH MOBILE CONTROL FOR TRACK LENGTHS UP TO 30 M

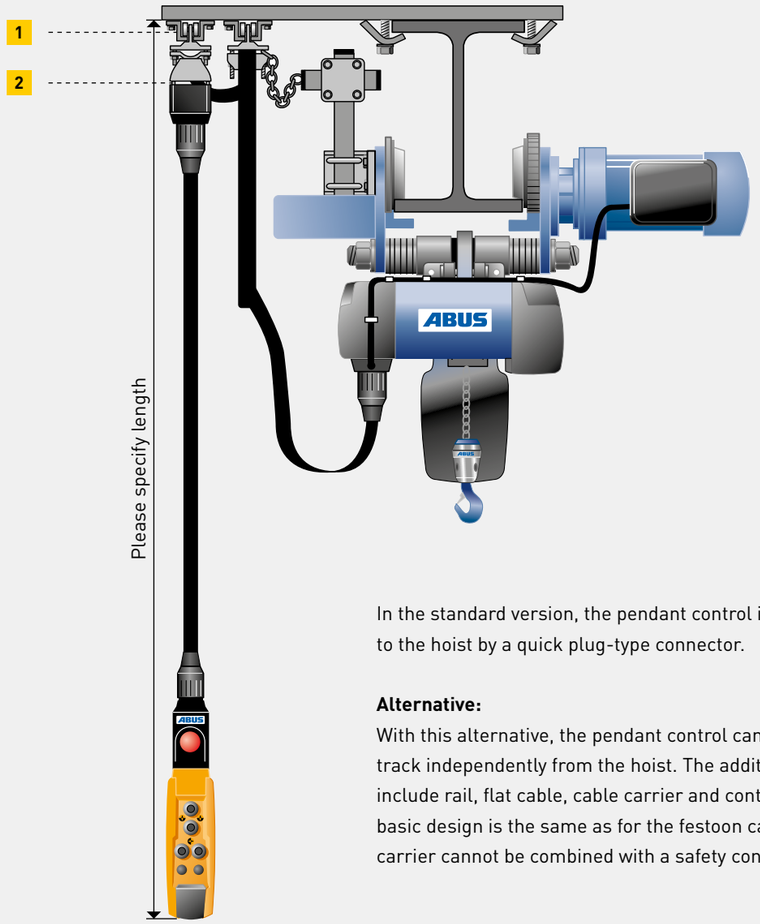

In the standard version, the pendant control is attached directly to the hoist by a quick plug-type connector.

Alternative:
With this alternative, the pendant control can be moved along the trolley track independently from the hoist. The additional components required include rail, flat cable, cable carrier and control carrier with connector. The basic design is the same as for the festoon cable system. A mobile control carrier cannot be combined with a safety conductor system.

Fixed components	Length-dependent components
Fixed components as for festoon system on page 18, plus: end clamp, mobile control carrier, bolted joints, end stop	Length-dependent components as for festoon system on page 18, plus: additional cable carriers, flat cable, rail supports, rail connectors for mobile control carrier

The voltage drop must be taken into consideration for the design of the system. The system is prefabricated, i.e. supplied with the flat cable on the cable carriers, current collector carrier and end clamp.

1 **Additional rail**

2 **Mobile control carrier**

ABUS SAFETY CONDUCTOR SYSTEM

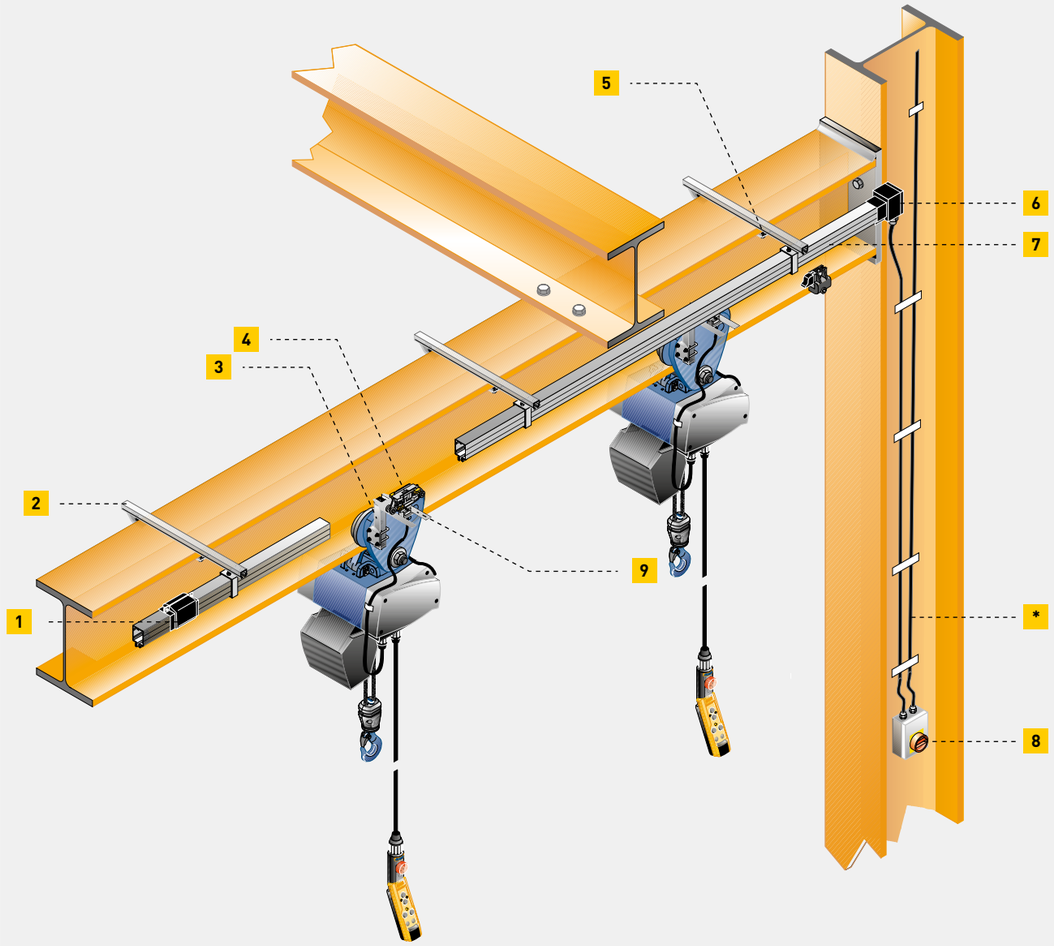

Type
KBH 4/63-HS
KBH 5/63-HS

Fixed components	Length-dependent components
End cap(s), end/line feed, Fixed point suspension, Collector with 2 m connection cable, collector fork and mains switch	Safety conductor, sliding mounts, mounting consoles, clamping brackets

* The riser cable from the mains switch and cabling to the power supply point, including accessories, are not included in the scope of supply.

Power supply from the centre of the conductor is required if the track length is above 30 m. The voltage drop corresponding to the track length must be taken into consideration for the design of the safety conductor system.

1 **Safety conductor and housing connector**

2 **Mounting console**

3 **Trolley current collector (part of scope of supply for hoist)**

4 **Current collector carrier**

5 **Clamping brackets**

6 **Power supply end feed / line feed**

7 **Protected conductor**

8 **Mains switch**

9 **Collector fork**

DRIVE GROUP (FEM GROUP) SELECTION AN IMPORTANT SUBJECT

Apart from the type of hoist required, the load capacity, the hook path and the lifting speed, the drive or FEM group is one of the main criteria to consider when selecting a hoist. The drive group must be selected to ensure that the hoist is fit for use for its intended purpose. Standard hoists are normally designed for a mean theoretical service life of 10 years, subject to operation in accordance with FEM 9.511. If the drive group selected is not appropriate in view of actual service conditions, the actual service life may be considerably shorter than 10 years. The results are excessive expenditure for maintenance, repairs and overhauls. In Germany, accident prevention regulations VBG D8 and D6 require hoist operators to determine the used-up portion of the theoretical service life during each regular inspection of the hoist. When the theoretical service life has elapsed, the hoist must be decommissioned. Continued operation is only permitted if an inspector finds that there are no objections to continued operation and lays down conditions for operation. Normally, the inspector requires the hoist to be overhauled. The objective of these requirements is to ensure that each hoist is only operated within its safe working period (S.W.P.).

The following table indicates the theoretical service life D in hours for FEM groups 1Bm, 1Am, 2m, 3m and 4m.

	Drive group	1Bm/ M3	1Am/ M4	2m/ M5	3m/ M6	4m/ M7
Line	Load population	Theoretical service life D (h)				
1	light	3 200	6 300	12 500	25 000	50 000
2	medium	1 600	3 200	6 300	12 500	25 000
3	heavy duty	800	1 600	3 200	6 300	12 500
4	very heavy duty	400	800	1 600	3 200	6 300

In addition to the mean working time per day, t_m (total average hours of operation of the hoist per day), the correct assessment of the load population is essential for selecting the appropriate drive group. The value t_m is given by the following equation:

$$t_m = \frac{2 \text{ x mean lifting hight (m) x load cycles (1/h) x working time (h/day)}}{60 \text{ (min/h) x lifting speed (m/min)}}$$

Mean lifting height:
the average hook travel under actual operating conditions

Load cycles:
the average number of lifting operations per hour. A load cycle consists of one lifting and one lowering operation, i.e. two hook movements (lifting operations with an empty hook as a result of process conditions must also be taken into account in determining load cycles, but also make the load population determined less severe.

Working time:
average working time per day within which the average load cycles per hour are performed

Lifting speed:
average lifting speed (normally the maximum lifting speed) at which the load cycles are performed.

The selection of the next highest FEM group results in a doubling of the theoretical service life if the operating conditions assumed remain unchanged. Further information on this rather complex subject is given by FEM 9.755 and the fourth supplement to accident prevention regulation VBG 8 for winches, hoists and traction systems.

If the mean working time t_m and the load population are known, the correct drive group in accordance with DIN 15020 or FEM 9.755 can be selected using the following table.

Load population	Definition of load population		Mean working time t_m per working day in h				
1 (light)	(k ≤ 0.50) Only operated at maximum load in exceptional cases, mainly operated at very low load, small dead load	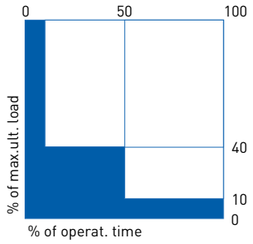	≤ 2	2 - 4	4 - 8	8 - 16	> 16
2 (medium)	(0.50 < k ≤ 0.63) operated quite frequently at maximum load, operated continuously at low load, medium dead load	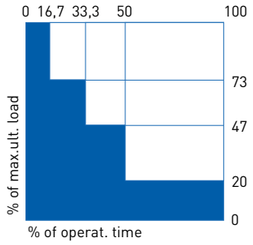	≤ 1	1 - 2	2 - 4	4 - 8	8 - 16
3 (heavy duty)	(0.63 < k ≤ 0.80) operated frequently at maximum load, operated continuously at medium load, heavy dead load	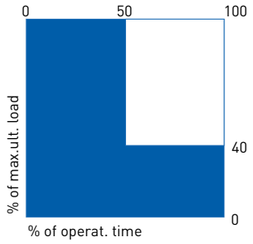	≤ 0,5	0,5 - 1	1 - 2	2 - 4	4 - 8
4 (very heavy duty)	(0.80 < k ≤ 1) operated regularly at maximum load, very heavy dead load	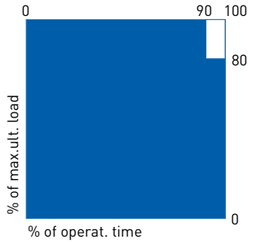	≤ 0,25	0,25 - 0,5	0,5 - 1	1 - 2	2 - 4
Drive/FEM group in accordance with DIN 15020 or FEM 9.511			1Bm	1Am	2m	3m	4m

COMPLETE SOLUTIONS FROM ABUS

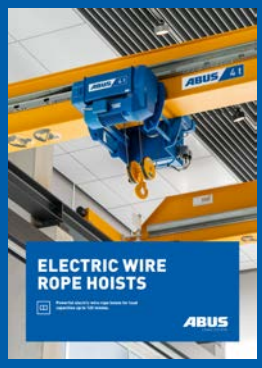

You can find further product information on our entire product portfolio at:
www.abuscranes.co.uk/downloads

PUBLISHER
ABUS Crane Systems Ltd.
Unit 1 Business Village
Blackbushe Business Park
Yateley · Hampshire GU46 6GA

Tel: (01252) 749 000
Email: info@abuscranes.co.uk

www.abuscranes.co.uk

ABUS
CRANE SYSTEMS

04.26